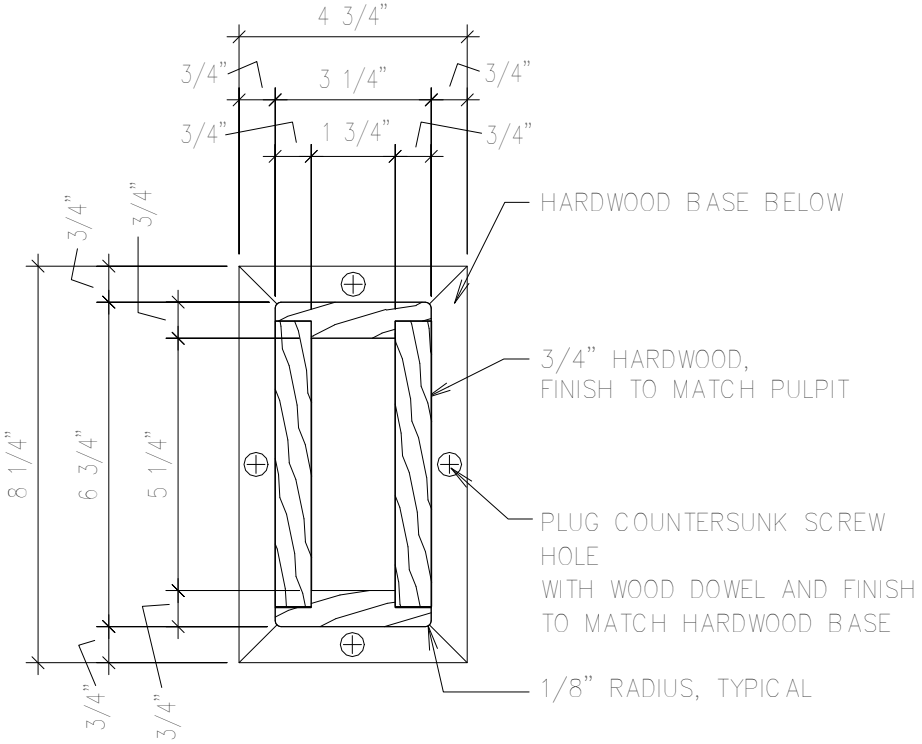

CONTROL PEDESTAL PLAN DETAIL

5

SCALE: 3" = 1'-0"

0 3" 6" 9"

ADDENDUM # 4 - APPENDIX 'J'
REFERENCE: A504

Hayes Design Group
ARCHITECTS
100 Ryan Court, Suite 11
Pittsburgh, PA 15205
Phone: 412.206.0410

WOODSTOCK WARD

ASK-04

Project No.:535259216030101 | **04/10/17**